PDF Published January 2, 2011

Type F111
Hot-Tap Flow Sensors

The Type F111 Hot-Tap Flow Sensors may be removed and reinstalled while the pipe is under pressure. A square wave output signal is generated with frequency proportional to rate of rotor rotation and flow velocity. This pulse output is normally fed to a FlowX3 flow monitor/transmitter, blind transmitter, batch controller or adjustable flow switch. It can also be fed to other brand instruments or PLC's.

Two types of sensors are available, Hall Effect which requires a 5 to 24 VDC power supply and Coil Effect which operates with less power, 3 to 5 VDC. Coil is required with the battery powered flow monitor. Hall Effect signals may be transmitted up to 300 meters (984 ft.) without the need for conditioning whereas Coil Effect signals may be transmitted up to 16 meters (52.5 ft.) without conditioning.

Body Material:	304 Stainless Steel
Rotor:	ECTFE (Halar®)
Shaft & Bearings:	Ceramic
Seals:	Viton®
Pipe Sizes:	3" – 24" Special versions available for other sizes See Installation Fittings (page 42)

Features

- **Ceramic Shaft and Bearings** – Provide long life on services containing grit
- **Heavy Duty Industrial Design**
- **Side Pressure Port** – This port is used to equalize pressure, assisting sensor insertion into the line under pressure. It can be used as a pressure monitoring port.

Side Pressure Port
Ball valve and saddle not shown.

Connectable FlowX3 Instruments

Instrument Mounting	Sensor No.	Sensor Type	FlowX3 Instruments*
Panel or Wall	F111.H	Hall	F9.00, F9.02, F9.03, F9.50, F9.51
Panel or Wall	F111.C	Coil	F9.20

* Power supply is normally fed from FlowX3 instruments.

Wiring

F111.H and F111.C Sensor Connection to FlowX3 Instruments

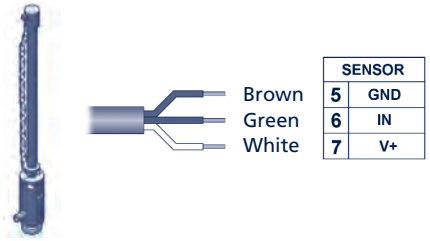

F111.H Sensor Connection to Other Brand Instruments

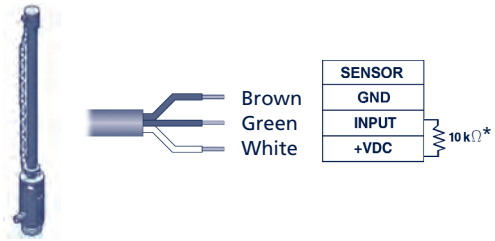

F111.C Sensor Connection to Other Brand Instruments

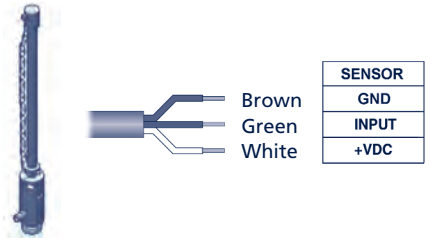

* 10 kΩ Pull-up resistor may be required when Hall sensors are connected to other brand instruments.

PDF Published January 2, 2011

Type F111
Hot-Tap Flow Sensors

Technical – General

Output Signal:	Square wave (pulse)
Output Frequency:	45 Hz per m/s nominal (13.7 Hz per ft./sec.)
Electrical Class:	NEMA 6, 6P (IP68)
Accuracy:	< ± 1% of reading value after field calibration or ± 0.75% of full scale
Repeatability:	± 0.5% of full scale
Velocity Range:	0.15 to 8 m/s (0.5 to 25 ft./sec.)
Viscosity Range:	0.5 to 20 centistokes. Field calibration is required if outside this range, up to 40 centistokes maximum.
Maximum % Solids:	10% with particle size not exceeding 0.5 mm cross section or length
Connection to Fitting:	2" Male BSP (GAS) thread
Side Pressure Port:	Quick Connect 3/8"
Max. Operating Pressure/Temperature:	150 psi at 80°C (176°F)†
Cable:	22 AWG, 3 conductors

Technical – F111.H Hall Effect Sensor

Supply Voltage*:	5 to 24 VDC regulated
Supply Current:	< 30 mA @ 24 VDC
Current Consumption:	12 to 30 mA
Output:	Transistor NPN open collector
Output Current:	10 mA max.
Max. Cable Length:	Max. 300 m (984 ft.) recommended without signal conditioning

Technical – F111.C Coil Effect Sensor

Power Supply:	Normally 2 x 3.6 V Lithium batteries located in the F9.20 flow monitor or 3 to 5 VDC regulated
Supply Current:	< 10 μA
Min. Input Impedance:	100 kΩ
Max. Cable Length:	Max. 16 m (52.5 ft.) recommended without signal conditioning

* Supply voltage is normally fed from FlowX3 instruments.

† Maximum pressure is limited to 150 psi by the Hot-Tap saddle and ball valve illustrated. The Hot-Tap flow sensor itself is rated to 290 psi.

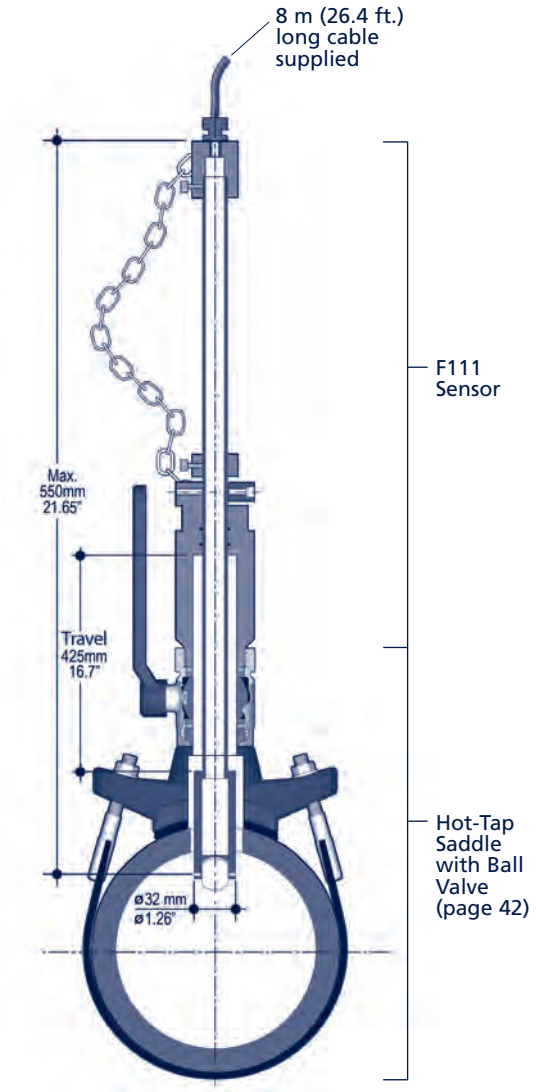

Installation Fittings

- The Hot-Tap Sensor must be installed with a Hot-Tap Saddle or Weld-On Adaptor, complete with ball valve shown above and on page 42. Other Hot-Tap Saddles (including ball valves) may be used, providing they have a 2" BSP (GAS) female connection.

PDF Published January 2, 2011

Installation Fittings for Hot-Tap F111 Sensor & F3.61M Magmeters

Digiflow® FLOW X3

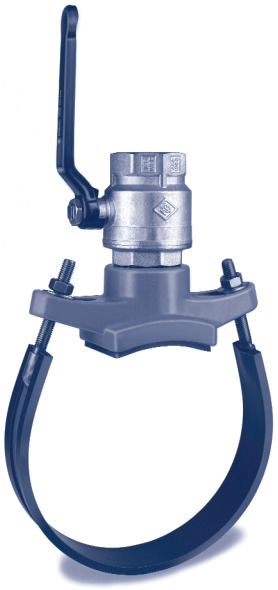

Hot-Tap Metal Strap-on Saddles

Includes 2" brass ball valve with BSP female threaded ends to connect directly to the F111 flow sensor. See pages 17 and 18.

Pipe Sizes: 3" to 18"
Body Materials: Cast Iron/Stainless Steel
Seals: Nitrile (NBR)
Nut Materials: Carbon Steel
Maximum Pressure: 150 psi
Maximum Temperature: 80°C (176°F), same as the sensor

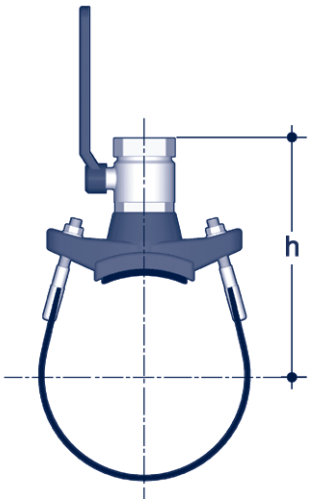

DIMENSIONS

Pipe Size	Item No.	OD (mm)		OD (inches)		h (inches)
		Min.	Max.	Min.	Max.	
3"	MSS030N–HT	88	104	3.5	4.1	7.28
4"	MSS040N–HT	112	126	4.4	5.0	7.83
5"	MSS050N–HT	140	154	5.5	6.1	8.62
6"	MSS060N–HT	168	184	6.6	7.2	9.13
8"	MSS080N–HT	218	244	8.6	9.6	10.31
10"	MSS100N–HT	272	295	10.7	11.6	11.22
12"	MSS120N–HT	322	354	12.7	13.9	12.32
14"	MSS140N–HT	356	414	14.0	16.3	13.30
16"	MSS160N–HT	406	472	16.0	18.6	14.01
18"	MSS180N–HT	457	534	18.0	21.0	15.35

Hot-Tap 316L Stainless Steel Weld-On Adaptors

2" ball valve is not included but is required. Consult Chemline.

DIMENSIONS INCHES
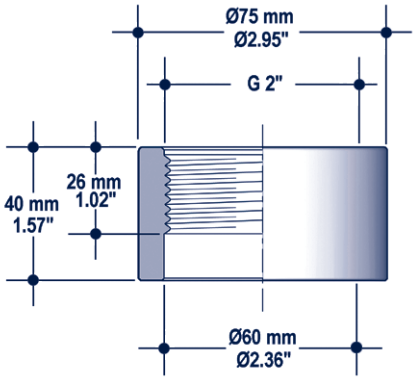
Pipe Size Min.	Item No.	OD Min.	Connection Size (BSP)
16"	WOSS–HT	15.75	2.00"